LH55DMD_Mechanical Drawing
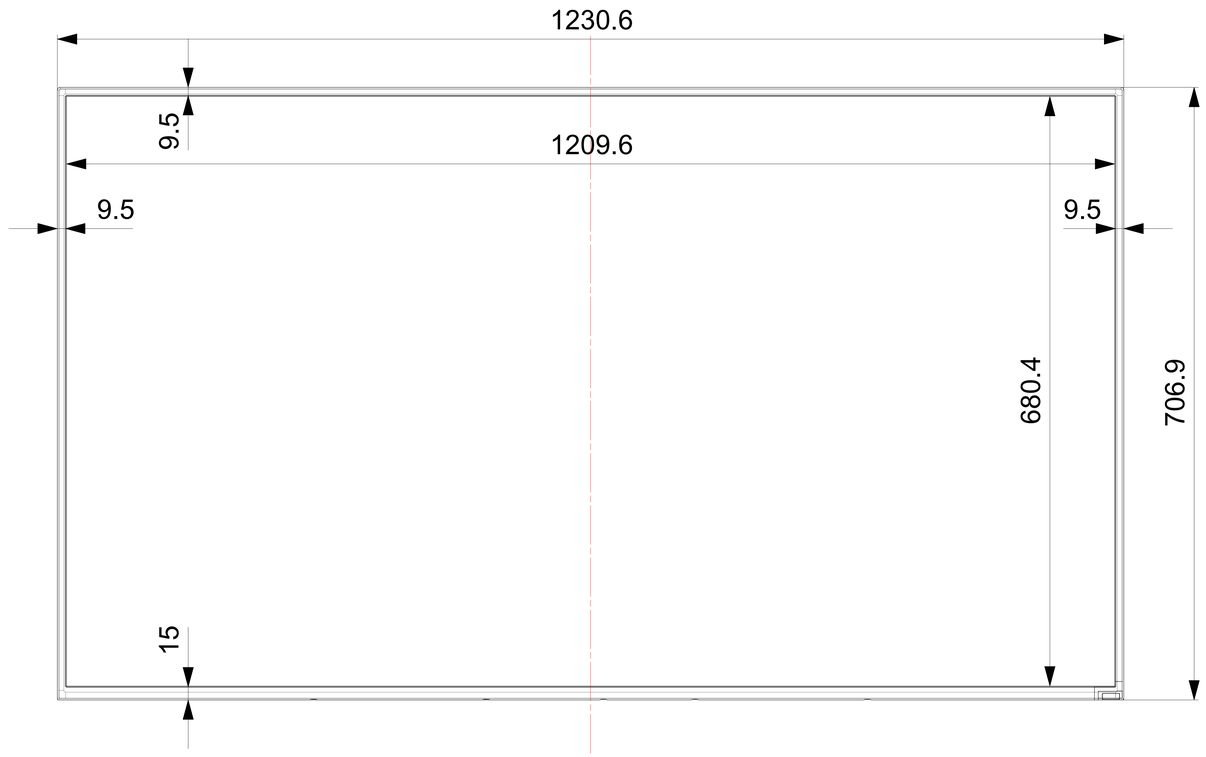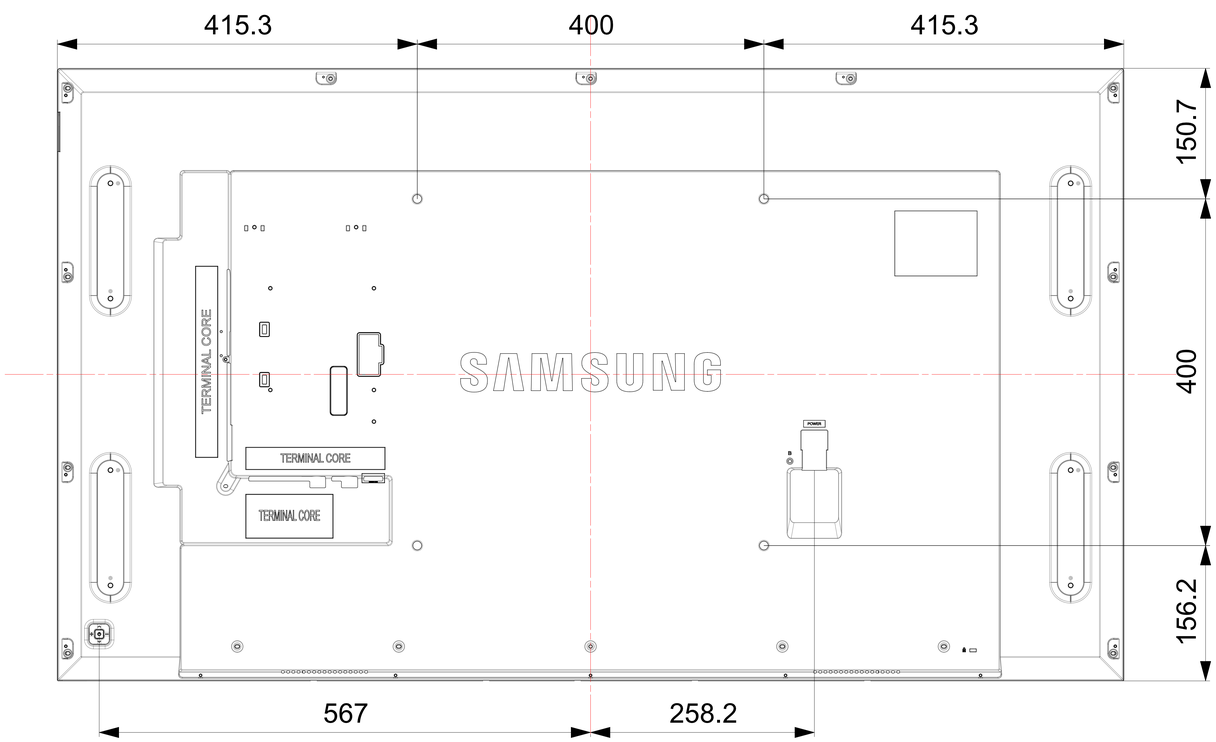
SET SIZE(W×H×D) : 1230.6×706.9×49.9
Opening SIZE : 1209.6×680.4
BEZEL WIDTH(T&L&R/B) : 9.5 / 15.0
VESA HOLE : 400×400